SPRNG™ architectural lighting

Type:	Project:	Submitted by:	Date:
Ordering information:			

PLANE | Architectural Recessed Troffer

Overview
The artful, architectural depth and angles of the PLANE LED troffer series creates dynamic visual appeal while delivering even illumination across the working plane.

Part #:
PLANE | Architectural Recessed Troffer

Lumens:
2'x2':

Max Lumen:	High Lumen:	Medium Lumen:	Low Lumen:
4,320 Lm / 32 W	3,510 Lm / 26 W	2,565 Lm / 19 W	2,160 Lm / 16 W

2'x4':

Max Lumen:	High Lumen:	Medium Lumen:	Low Lumen:
5,805 Lm / 43 W	4,860 Lm / 36 W	4,050 Lm / 30 W	2,970 Lm / 22 W

Color:
CCT:
2700K
3000K
3500K
4000K
5000K
Field Selectable
(2700K/3000K/3500K/4000K/5000K)

CRI:
90

Voltage:
Standard:
120-277 V

Dimming:
Standard:
0-10V 1%

Optional:
9SEL

Lifetime:
Standard:
L70 > 100,000 Hrs.

Operating Temperature:
Standard:
-4°F to 122°F

Finishes:
Plane White

Anti-Bacterial White

Custom color available*

*All custom color requests must be call to order and will affect leadtimes. Accommodation for RAL color code is available.

5 year warranty Standard

10 year warranty Available

CERTIFIED

PLANE
Architectural Recessed Troffer



Features:
Take flight
Clean, modern design with angled, artful side panels.

Light weight, engineered design
Optimally engineered to match modern lighting expectations, the PLANE series cuts the unncessary weight with a focus on design + output.

Low compromise
Specification made easier with high-end form, engineered for modern expectations.

Mounting:
Pendant Mount

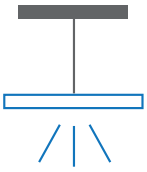

Surface Mount:



Recessed Mount:

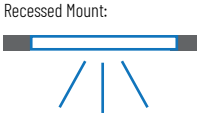

Dimensions:
2x2

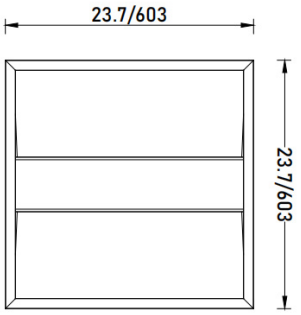

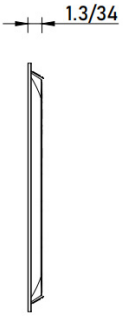

2x4

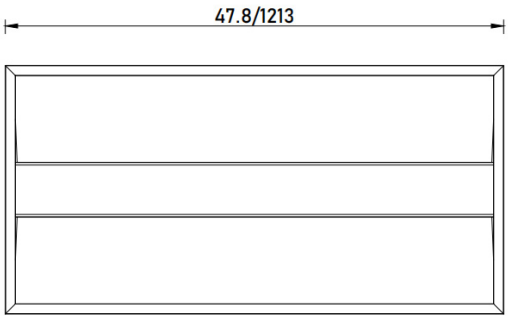

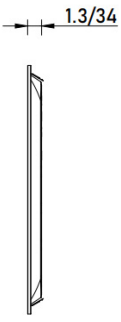

Photometrics

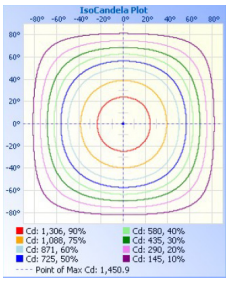

PLANE 22 32 W 4000K CCT

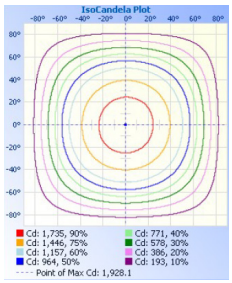

PLANE 22 32 W 4000K CCT

SPRNG ARCHITECTURAL LIGHTING - www.sprngarch.com
11325 Cash Rd. Ste. 100 - Houston, TX 77477 U.S.A
sales@SPRNGARCH.com
All images and text copyright SPRNG Architectural Lighting and SLG Lighting, Inc. 2026, all rights reserved.

SPRNG™ architectural lighting

Type:	Project:	Submitted by:	Date:
Ordering information:			

PLANE | Architectural Recessed Troffer

Example: PLANE 22 SM X D1 927

Ordering Guide:
Use the buttons below to build out a product number.

Clear form

Select one option per numbered section. If a preferred option is not here, please contact your local SPRNG representative for more information.

Troffer Body | *Output and color*

1 Series	2 Diameter	3 Mounting	3 Lumen	4 Input Voltage	5 Dimming	6 CCT/CRI	7 Finish	8 Emegency	9 Sensor
○ PLANE *Architecture Recessed selectable Troffer*	○ 22 *2'x2'* ○ 24 *2'x4'*	○ SM[1] *Surface mount to dry wall* ○ SP *Suspended mount (7ft max)* ○ RMDT *9Recessed mount to drywall* ○ RMDC *Recessed mount to T-grid* *[1]Note: Only capatible with Dry wall celings.*	○ X *Max Lumen* ○ H *High Lumen* ○ M *Medium Lumen* ○ L *Low Lumen*	○ BLANK *120V-277V*	○ D1 *0-10V 1%*	○ 927 *90 CRI - 2700K* ○ 930 *90 CRI - 3000K* ○ 935 *90 CRI - 3500K* ○ 940 *90 CRI - 4000K* ○ 950 *90 CRI - 5000K* ○ 9SEL *Field Selectable (2700/3000/3500/4000/5000K)*	○ BLANK *White*	○ BLANK *No Emergency* ○ EM8 *Emergency Battery 8W*	○ BLANK *No Sensor* ○ BS *Bluetooth sensor* ○ MS *PIR/Daylight Sensor*

Performance Data

Series Number	Output	Wattage	Lumens	CCT
PLANE 22	Max	32 W	4,320 Lm	2700K 3000K 3500K 4000K 5000K
	High	26 W	3,510 Lm	
	Medium	19 W	2,565 Lm	
	Low	16 W	2,160 Lm	
PLANE 24	Max	43 W	5,805 Lm	
	High	36 W	4,860 Lm	
	Medium	30 W	4,050 Lm	
	Low	22 W	2,970 Lm	

SPRNG ARCHITECTURAL LIGHTING - www.sprngarch.com
11325 Cash Rd. Ste. 100 - Houston, TX 77477 U.S.A
sales@SPRNGARCH.com
All images and text copyright SPRNG Architectural Lighting and SLG Lighting, Inc. 2026, all rights reserved.

Type:	Project:	Submitted by:	Date:
Ordering information:			

PLANE | Architectural Recessed Troffer

Mounting Overview (Recessed)

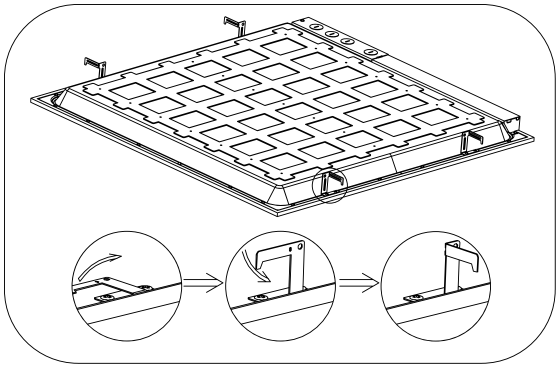

Bend the four mounting clips on the side upward as shown.

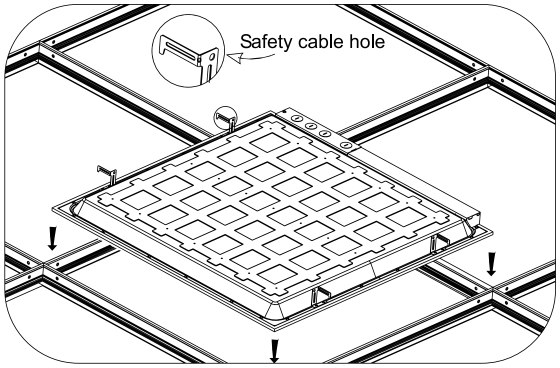

Insert fixture into ceiling grid & secure hooks and fixture.

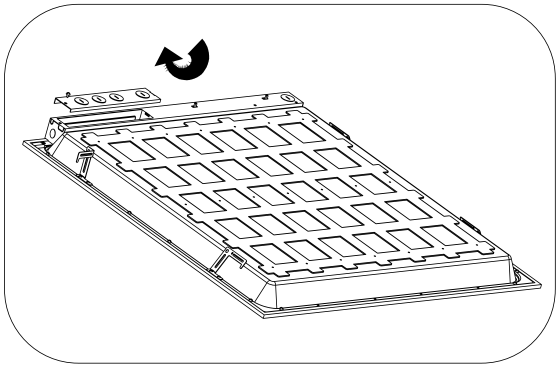

Remove driver cover to remove knockouts for input wires on the plate.

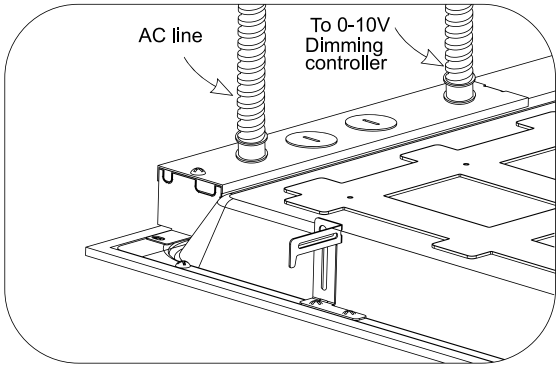

Wire the power and dimming inputs through the knockouts. (Please make sure power is off beforehand!)

Mounting Overview (Suspended)

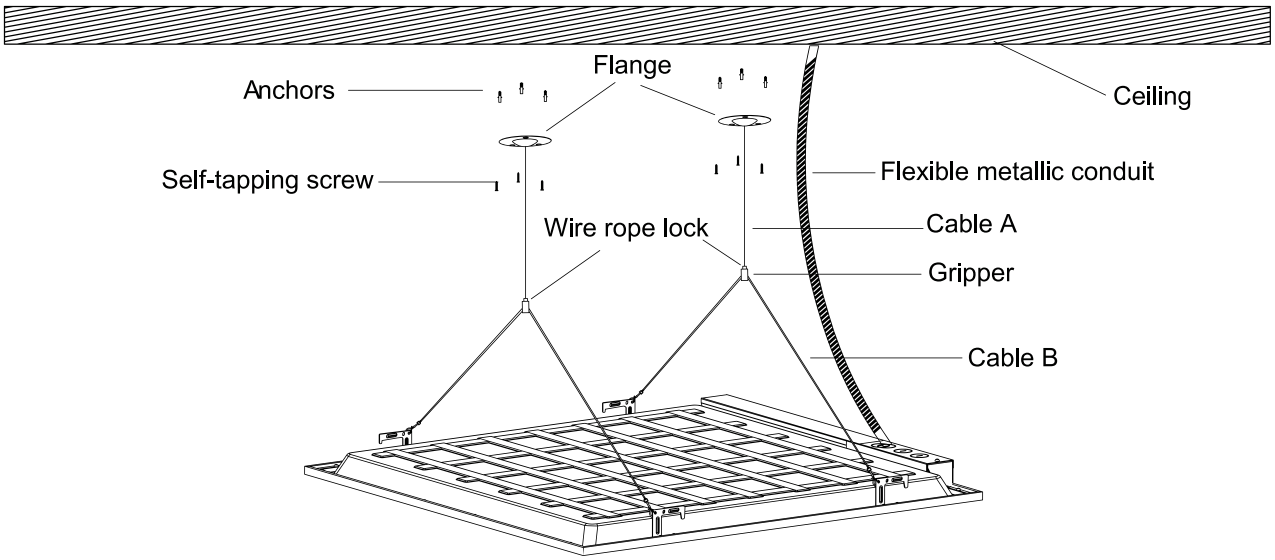

All images and text copyright SPRNG Architectural Lighting and SLG Lighting, Inc. 2026, all rights reserved.

Type:	Project:	Submitted by:	Date:
Ordering information:			

PLANE | Architectural Recessed Troffer

Controls Overview



SLG SYNC
Networked Motion Sensor

Specifications

Input Voltage: DC 12V	Sinking Current: 10mA Max	Mounting Height: 18 ft (Max recommended)
Input Current: 25mA Max	Bluetooth Transmit: 100 ft. Max	Dimming: Class 2, 0-10V DC 10mA Max
Input Power: 0.3W	Radio Frequency: 2.4 GHz +- 75 MHz	Operating Temperature: -30°C to 55°C (-22°F to 131°F)
Output Current: 10mA Max	IP Rating: IP20	Warranty: 5 Year Warranty
Output Power: 0.1 W	Detection Range: 40 ft (Max)	

Commission

This Bluetooth sensor/controller is easily commissioned via the SLG Sync app, available for download on Google Play and the App Store.

App Download

sync SLG

Download on the App Store

GET IT ON Google Play

For commissioning guide and more information visit:
www.slgsync.com

Dimensions

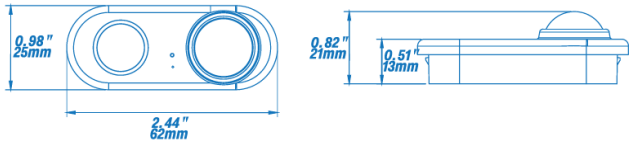

Wiring Diagram

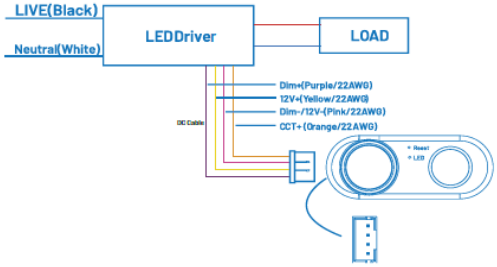



PIR
Standalone Motion Sensor

Specifications

Input Voltage: 10-15V DC	Mounting Height 13 ft (<4m)	IP Rating: IP20
Input Current: <15mA Max	Detection Range: Radius 7-13ft (2-4m)	Operating Temperature: -30°C to 55°C (-22°F to 131°F)
Standby Power: 12V DC@<0.5W	Detection Angle: Fresnel Lens <360°	Warranty: 5 Year Warranty

Commission

This basic sensor is commissioned via the RC remote. Either pre-commissioned or commissioned on site.



RC

Dimensions

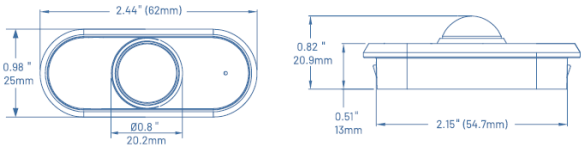

Wiring Diagram

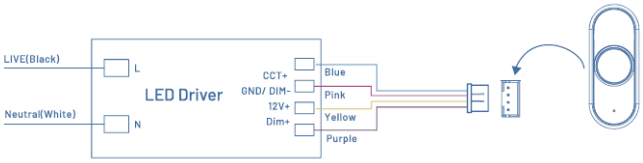

All images and text copyright SPRNG Architectural Lighting and SLG Lighting, Inc. 2026, all rights reserved.

SPRNG™ architectural lighting

Type:	Project:	Submitted by:	Date:
Ordering information:			

PLANE | Architectural Recessed Troffer

UGR

		UGR (PLANE 2x2 Troffer (4,300K @ 2700K)									
		Crosswise					Endwise				
Room X	Room Y	70/50/20	70/30/20	50/50/20	50/30/20	30/30/20	70/50/20	70/30/20	50/50/20	50/30/20	30/30/20
2H	2H	16.8	18.4	17.2	18.8	19.1	16.4	18.1	16.8	18.4	18.7
2H	3H	18.6	20.1	19	20.4	20.8	18.1	19.6	18.5	19.9	20.3
2H	4H	19.3	20.7	19.7	21	21.4	18.7	20.1	19.1	20.4	20.8
2H	6H	19.8	21.1	20.2	21.4	21.8	19	20.3	19.5	20.7	21.1
2H	8H	19.9	21.1	20.3	21.5	21.9	19.1	20.4	19.5	20.8	21.2
2H	12H	20	21.2	20.4	21.6	22	19.2	20.4	19.6	20.7	21.2
4H	2H	17.4	18.8	17.8	19.2	19.5	17.1	18.5	17.5	18.8	19.2
4H	3H	19.4	20.6	19.8	21	21.4	19	20.1	19.4	20.5	20.9
4H	4H	20.2	21.3	20.7	21.7	22.1	19.6	20.7	20.1	21.1	21.5
4H	6H	20.8	21.8	21.3	22.2	22.7	20.1	21	20.6	21.5	21.9
4H	8H	21	21.9	21.5	22.3	22.8	20.2	21.1	20.7	21.5	22
4H	12H	21.1	21.9	21.6	22.4	22.9	20.3	21.1	20.8	21.6	22
8H	4H	20.5	21.4	21	21.8	22.3	19.9	20.8	20.4	21.2	21.7
8H	6H	21.2	22	21.7	22.4	22.9	20.5	21.2	21	21.7	22.2
8H	8H	21.5	22.1	22	22.6	23.1	20.7	21.3	21.2	21.8	22.3
8H	12H	21.7	22.3	22.2	22.7	23.3	20.8	21.4	21.3	21.8	22.4
12H	4H	20.5	21.3	21	21.8	22.3	20	20.7	20.4	21.2	21.7
12H	6H	21.3	21.9	21.8	22.4	22.9	20.6	21.2	21.1	21.7	22.2
12H	8H	21.6	22.2	22.1	22.7	23.2	20.8	21.3	21.3	21.8	22.4

		UGR (PLANE 2x2 Troffer (4,300K @ 5000K)									
		Crosswise					Endwise				
Room X	Room Y	70/50/20	70/30/20	50/50/20	50/30/20	30/30/20	70/50/20	70/30/20	50/50/20	50/30/20	30/30/20
2H	2H	16.8	18.4	17.2	18.7	19.1	16.4	18.1	16.8	18.4	18.7
2H	3H	18.6	20.1	19	20.4	20.8	18.1	19.6	18.5	19.9	20.3
2H	4H	19.3	20.7	19.6	21	21.4	18.6	20.1	19	20.4	20.8
2H	6H	19.8	21	20.2	21.4	21.8	19	20.3	19.4	20.7	21.1
2H	8H	19.9	21.1	20.3	21.5	21.9	19.1	20.4	19.5	20.7	21.1
2H	12H	20	21.2	20.4	21.6	22	19.2	20.3	19.6	20.7	21.2
4H	2H	17.4	18.8	17.8	19.1	19.5	17	18.5	17.4	18.8	19.2
4H	3H	19.4	20.6	19.8	21	21.4	18.9	20.1	19.4	20.5	20.9
4H	4H	20.2	21.3	20.6	21.7	22.1	19.6	20.7	20.1	21.1	21.5
4H	6H	20.8	21.7	21.3	22.2	22.6	20.1	21	20.6	21.5	21.9
4H	8H	21	21.9	21.5	22.3	22.8	20.2	21.1	20.7	21.5	22
4H	12H	21.1	21.9	21.6	22.4	22.9	20.3	21.1	20.8	21.5	22
8H	4H	20.5	21.4	21	21.8	22.3	19.9	20.8	20.4	21.2	21.7
8H	6H	21.2	21.9	21.7	22.4	22.9	20.5	21.2	21	21.7	22.2
8H	8H	21.5	22	22.1	22.6	23.1	20.7	21.3	21.2	21.8	22.3
8H	12H	21.7	22.2	22.2	22.7	23.3	20.8	21.3	21.3	21.8	22.4
12H	4H	20.5	21.3	21	21.8	22.3	19.9	20.7	20.4	21.2	21.7
12H	6H	21.3	21.8	21.9	22.4	22.9	20.6	21.2	21.1	21.7	22.2
12H	8H	21.6	22.1	22.2	22.6	23.2	20.8	21.3	21.3	21.8	22.4

SPRNG ARCHITECTURAL LIGHTING - www.sprngarch.com
11325 Cash Rd. Ste. 100 - Houston, TX 77477 U.S.A
sales@SPRNGARCH.com
All images and text copyright SPRNG Architectural Lighting and SLG Lighting, Inc. 2026, all rights reserved.

SPRNG™ architectural lighting

Type:	Project:	Submitted by:	Date:
Ordering information:			

PLANE | Architectural Recessed Troffer

UGR

		UGR (PLANE 2x4 Troffer (5,800K @ 2700K)									
		Crosswise					Endwise				
Room X	Room Y	70/50/20	70/30/20	50/50/20	50/30/20	30/30/20	70/50/20	70/30/20	50/50/20	50/30/20	30/30/20
2H	2H	15.4	17	15.8	17.4	17.7	14.9	16.5	15.3	16.8	17.2
2H	3H	17.2	18.7	17.6	19	19.4	16.5	18	16.9	18.4	18.7
2H	4H	17.9	19.3	18.3	19.7	20	17.1	18.5	17.5	18.9	19.2
2H	6H	18.4	19.7	18.8	20.1	20.5	17.5	18.8	17.9	19.1	19.5
2H	8H	18.6	19.8	19	20.2	20.6	17.6	18.8	18	19.2	19.6
2H	12H	18.7	19.9	19.1	20.2	20.7	17.6	18.8	18	19.2	19.6
4H	2H	16	17.4	16.4	17.8	18.1	15.5	16.9	15.9	17.3	17.7
4H	3H	18.1	19.2	18.5	19.6	20	17.4	18.6	17.8	19	19.4
4H	4H	18.9	19.9	19.3	20.3	20.8	18.1	19.2	18.5	19.6	20
4H	6H	19.5	20.4	19.9	20.9	21.3	18.6	19.5	19	19.9	20.4
4H	8H	19.7	20.6	20.1	21	21.5	18.7	19.5	19.1	20	20.5
4H	12H	19.8	20.6	20.3	21.1	21.6	18.7	19.5	19.2	20	20.5
8H	4H	19.1	20	19.6	20.5	20.9	18.4	19.3	18.9	19.7	20.2
8H	6H	19.9	20.6	20.4	21.1	21.6	19	19.7	19.5	20.2	20.7
8H	8H	20.2	20.8	20.7	21.3	21.8	19.2	19.8	19.7	20.3	20.8
8H	12H	20.4	20.9	20.9	21.4	22	19.2	19.8	19.7	20.3	20.9
12H	4H	19.2	20	19.6	20.4	20.9	18.4	19.2	18.9	19.7	20.2
12H	6H	20	20.6	20.5	21.1	21.6	19.1	19.7	19.6	20.2	20.7
12H	8H	20.2	20.8	20.8	21.3	21.9	19.2	19.8	19.7	20.3	20.9

		UGR (PLANE 2x2 Troffer (5,800K @ 5000K)									
		Crosswise					Endwise				
Room X	Room Y	70/50/20	70/30/20	50/50/20	50/30/20	30/30/20	70/50/20	70/30/20	50/50/20	50/30/20	30/30/20
2H	2H	15.5	17.1	15.8	17.4	17.8	15	16.6	15.3	16.9	17.2
2H	3H	17.3	18.8	17.7	19.1	19.5	16.6	18.1	17	18.4	18.8
2H	4H	18	19.4	18.4	19.7	20.1	17.2	18.6	17.6	18.9	19.3
2H	6H	18.5	19.8	18.9	20.2	20.6	17.6	18.9	18	19.2	19.6
2H	8H	18.7	19.9	19.1	20.3	20.7	17.6	18.9	18.1	19.3	19.7
2H	12H	18.8	19.9	19.2	20.3	20.8	17.7	18.9	18.1	19.3	19.7
4H	2H	16.1	17.5	16.5	17.8	18.2	15.6	17	16	17.4	17.8
4H	3H	18.1	19.3	18.6	19.7	20.1	17.5	18.7	17.9	19.1	19.5
4H	4H	19	20	19.4	20.4	20.9	18.2	19.2	18.6	19.7	20.1
4H	6H	19.6	20.5	20	20.9	21.4	18.7	19.6	19.1	20	20.5
4H	8H	19.8	20.7	20.2	21.1	21.6	18.8	19.6	19.2	20.1	20.5
4H	12H	19.9	20.7	20.4	21.2	21.6	18.8	19.6	19.3	20.1	20.6
8H	4H	19.2	20.1	19.7	20.5	21	18.5	19.4	19	19.8	20.3
8H	6H	20	20.7	20.5	21.2	21.7	19.1	19.8	19.6	20.3	20.7
8H	8H	20.3	20.9	20.8	21.4	21.9	19.2	19.9	19.8	20.4	20.9
8H	12H	20.4	21	20.9	21.5	22.1	19.3	19.9	19.8	20.4	21
12H	4H	19.3	20	19.7	20.5	21	18.5	19.3	19	19.8	20.3
12H	6H	20	20.7	20.5	21.1	21.7	19.1	19.8	19.6	20.2	20.8
12H	8H	20.3	20.8	20.9	21.4	22	19.3	19.9	19.8	20.4	21

All images and text copyright SPRNG Architectural Lighting and SLG Lighting, Inc. 2026, all rights reserved.