SPRNG™ architectural lighting

ARCHITECTURAL ROUND LIGHT INSTALLATION GUIDE

DRUM

⚠ WARNING

To avoid the risk of fire or electric shock, this product should be installed, inspected, and maintained by a qualified electrician only. Installation should be completed by an individual familiar with the construction and operation of the luminaire.Installation of luminaire must be in accordance with national and local building and electrical codes.

Safety Warning:
To avoid electric shock:
Be certain electrical power is OFF before and during installation and maintenance.
Luminaire must be supplied by a wiring system with an equipment grounding conductor.
To avoid burning hands:
Make sure lens and housing are cool when performing maintenance.
To avoid product degradation:
Make sure the wire supply voltage is the same as the luminaire supply.
Use proper supply wiring as specified on the luminaire nameplate.
Avoid use in environments containing sulfur,chlorine,or other halides,methyl acetate or ethyl acetate, cyanoacrylates,glycolethers, formaldehyde or butadiene.

Notes:
Instructions do not cover all details and all possible product configurations.
Do not restrict luminaire ventilation.
Ensure LED luminaire is not covered with material that will prevent convection or conduction cooling.
Ensure LED luminaire has the correct polarity before installation.
Avoid exposing wiring to metal edges and sharp objects.

Maintenance:
Perform visual,electrical,and mechanical inspections on a regular basis.The environment and frequency of use should determine this. However,it is recommended that checks be made at least once a year.Electrically check to make sure that all connections are clean and tight.Mechanically check that all parts are properly assembled.

DRYWALL PENDANT MOUNT INSTALLATION

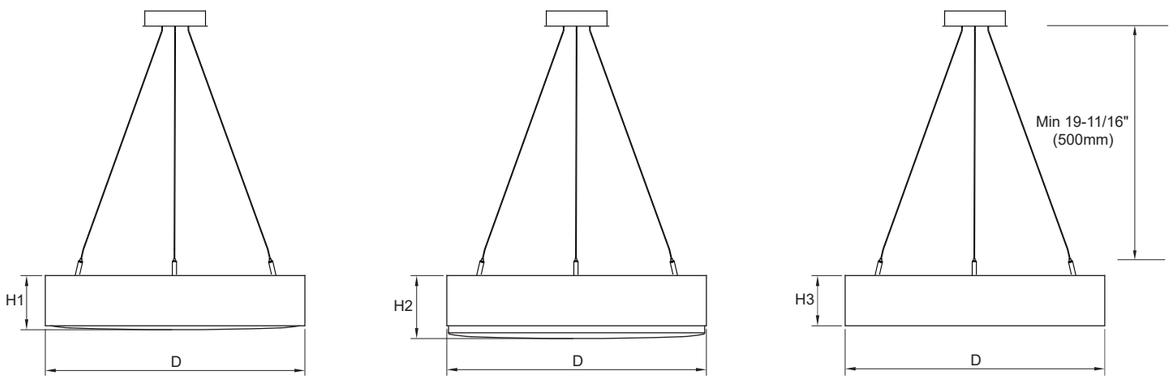

Flush Diffuser | Drop Diffuser | Regress Diffuser

Size	D	H1	H2	H3	WEIGHT
2FT	22.1"(561mm)	4.6"(116.5mm)	5.3"(135.5mm)	4.3"(108mm)	17.06LBS"(7.74kg)
3FT	34.1"(866mm)	4.6"(116.5mm)	5.3"(135.5mm)	4.3"(108mm)	39LBS"(17.74kg)
4FT	46.1"(1171mm)	4.6"(116.5mm)	5.3"(135.5mm)	4.3"(108mm)	61LBS"(27.74kg)

When mounting this fixture to a gypsum or T-bar ceiling, it must be supported according to local codes and ordinances to accommodate the fixture's weight. Installation should be performed by two people.

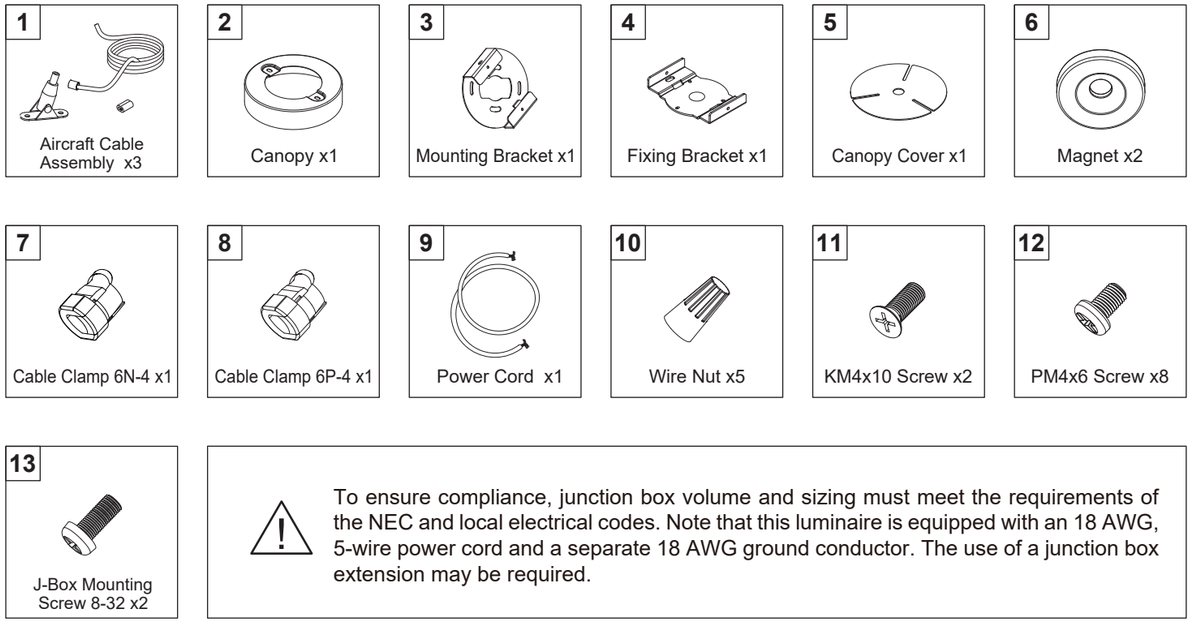

⚠ To ensure compliance, junction box volume and sizing must meet the requirements of the NEC and local electrical codes. Note that this luminaire is equipped with an 18 AWG, 5-wire power cord and a separate 18 AWG ground conductor. The use of a junction box extension may be required.

Pre-installation Preparation

1

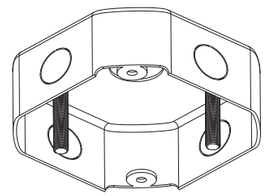

Install J-box (by others) and 1/4" rods (by others) secure rods to structure above.

2

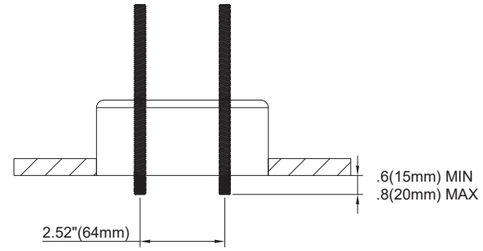

Threaded rods must extend .6 min/.8 max beyond the ceiling plane.

Installation Procedure

1

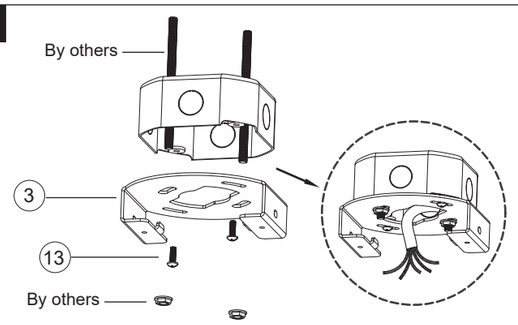

Use nuts (matching the J-Box) and screws to fasten the mounting bracket to the junction box, and pull out the wires.

2

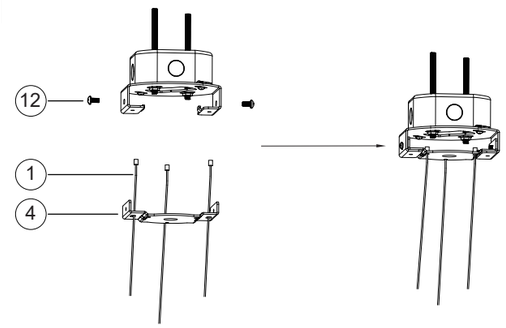

Feed the aircraft cables through the fixing bracket and secure it to the mounting bracket with screws.

3

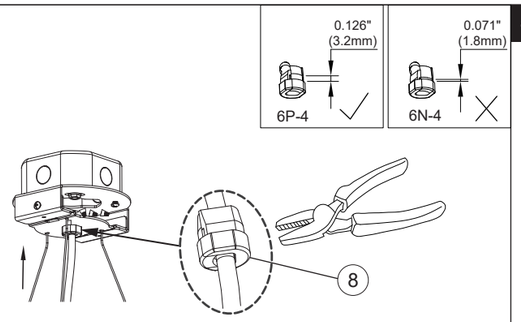

Feed the power cord through the fixing bracket, and then secure it with the cable clamp (6P-4) by tightening with pliers.

4

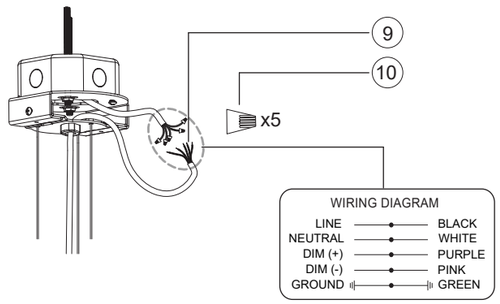

Connect the power cord to the mains with the wire nuts, then tuck all the wires into the bracket.

5

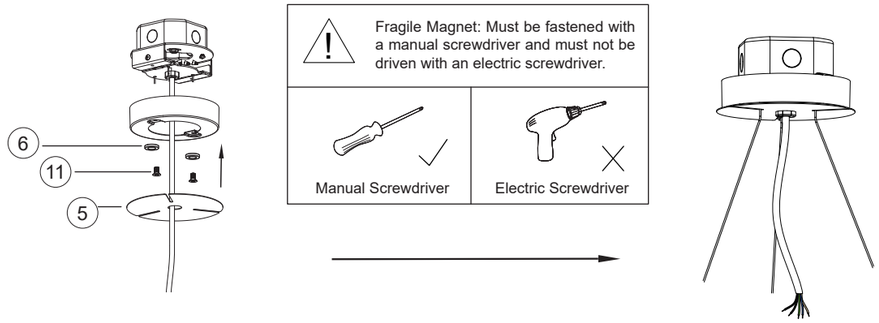

Fasten the canopy and magnets to mounting bracket with screws, thread the cover through the power cord and attach it to the magnets.

6

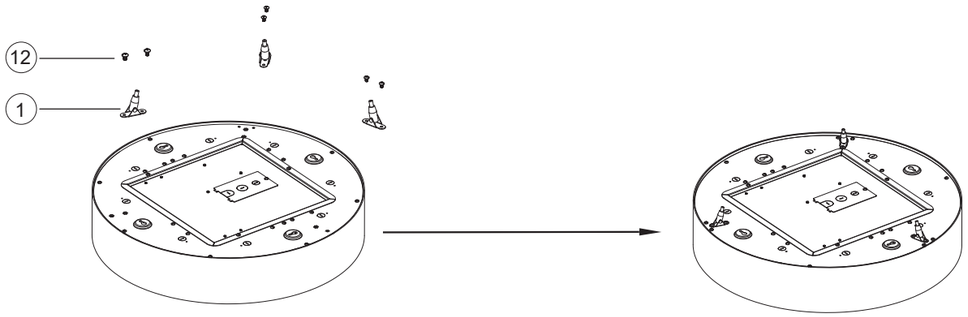

Fasten the movable clamp to the back plate with screws.

7

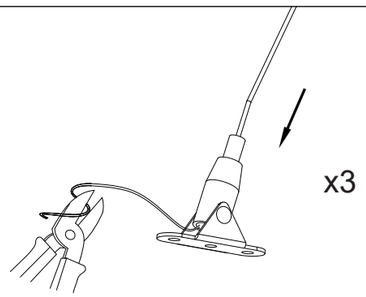

Insert the three aircraft cables into the lifting movable parts respectively, adjust their length, and cut off the bare ends.

8

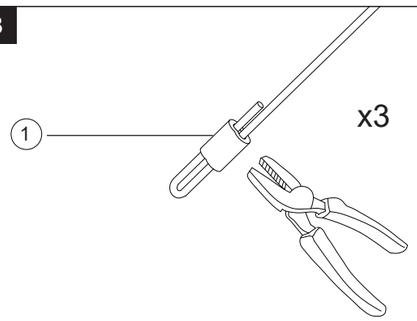

Feed the end of the aircraft cables through the swaging sleeves and tighten them with pliers.

9

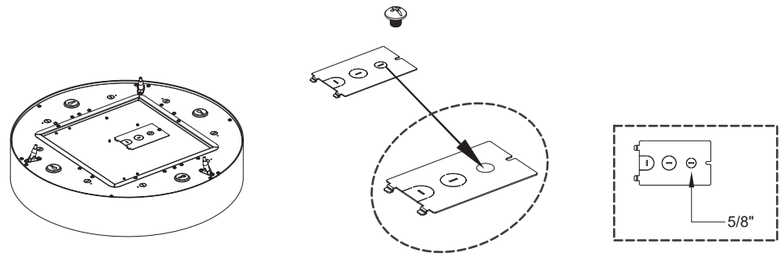

Remove the wire cover and knock out the corresponding knockout hole.

10

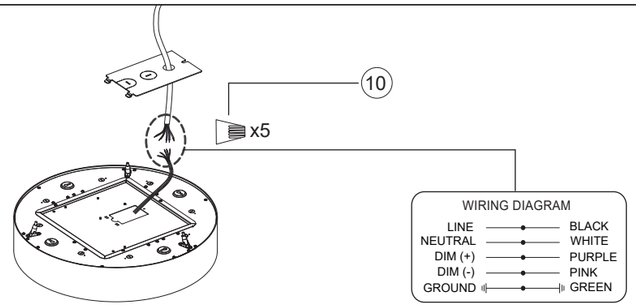

Thread the wires through the wire cover and connect them to the internal wires of the luminaire with the wire nuts.

11

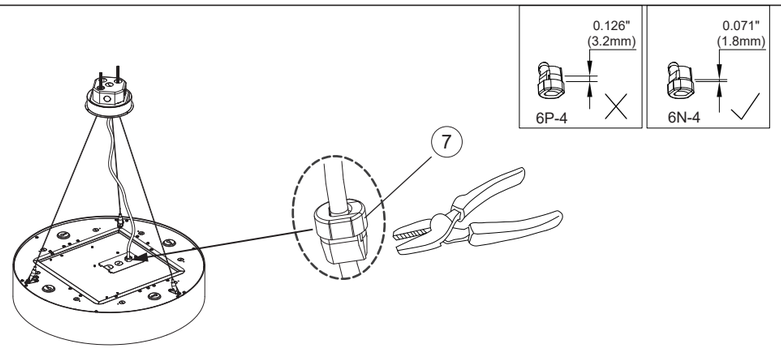

Tuck the wires back into the luminaire, reinstall the wire cover as illustrated, and secure the cord with the cable clamp (6N-4) by tightening it with pliers.

ARCHITECTURAL ROUND LIGHT

INSTALLATION PROCEDURE

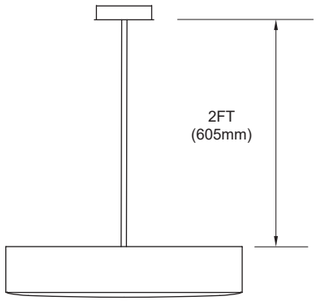

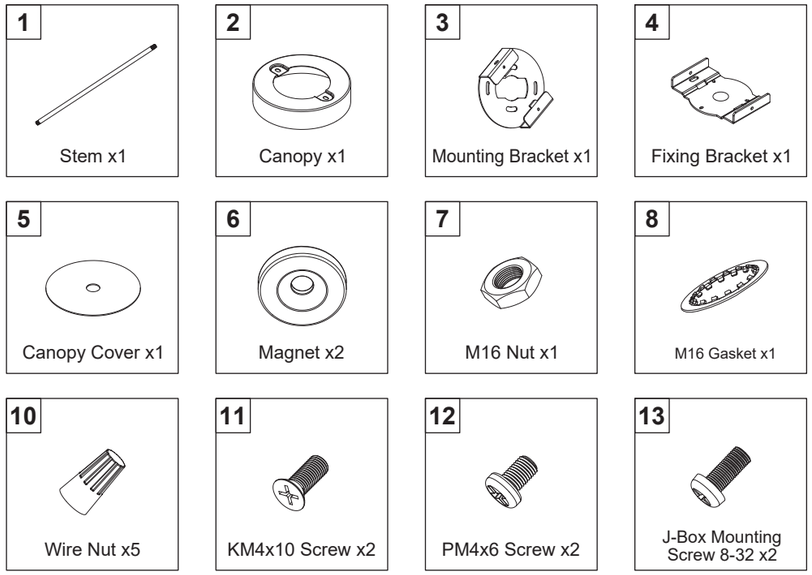

To ensure compliance, junction box volume and sizing must meet the requirements of the NEC and local electrical codes. Note that this luminaire is equipped with an 18 AWG, 5-wire power cord and a separate 18 AWG ground conductor. The use of a junction box extension may be required.

Pre-installation Preparation

1

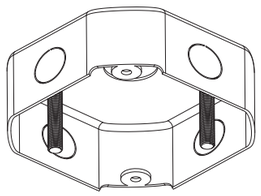

Install J-Box (by others) and 1/4" rods (by others) secure rods to structure above.

2

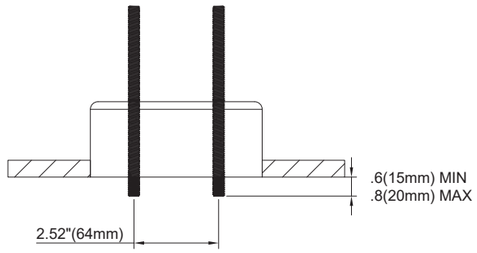

Threaded rods must extend .6 min/.8 max beyond the ceiling plane.

Installation Procedure

1

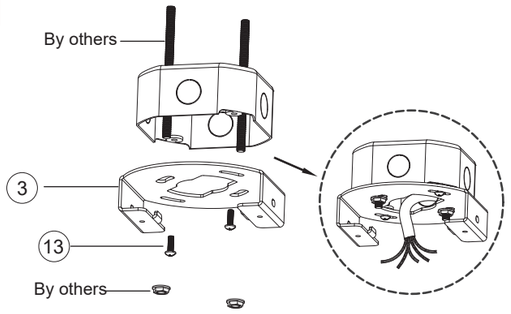

Use nuts (matching the J-Box) and screws to fasten the mounting bracket to the junction box, and pull out the wires.

2

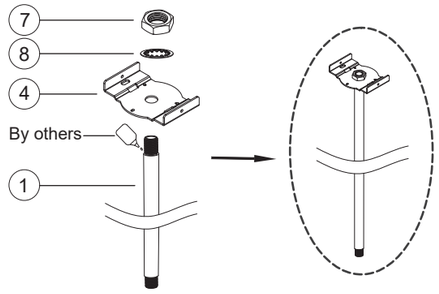

Apply provided thread locking compound along the entire length of the coupling to be joined to help prevent loosening due to shock or vibration. Fasten the fixing bracket to the stem with the gasket and nut securely.

DRUM

STEM PENDANT MOUNT INSTALLATION

3

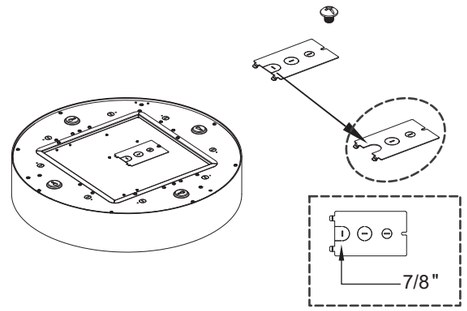

Remove the wire cover from the luminaire and knock out the corresponding knockout hole.

4

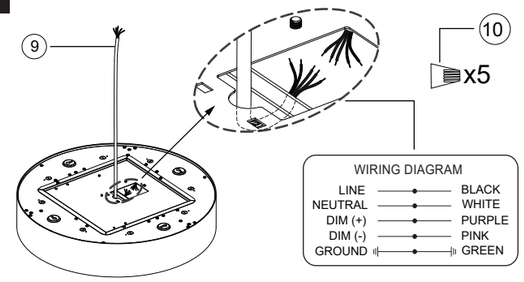

First, thread the power cord through the bottom bracket, then pull it out and connect it to the internal wires of the luminaire; when threading the cord, you may wrap the end wires with electrical tape for easier pulling.

5

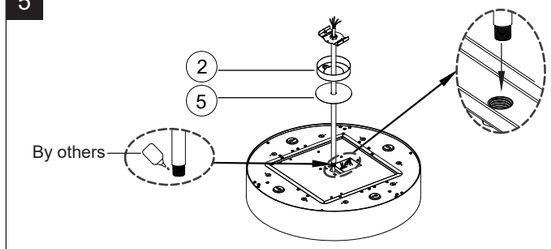

Tuck the connected electric wire back into the lamp body, then thread the wire through the stem with the canopy cover and the canopy. Apply provided thread locking compound along the entire length of the coupling to be joined to help prevent loosening due to shock or vibration. Finally, screw the stem onto the reinforcing bracket.

6

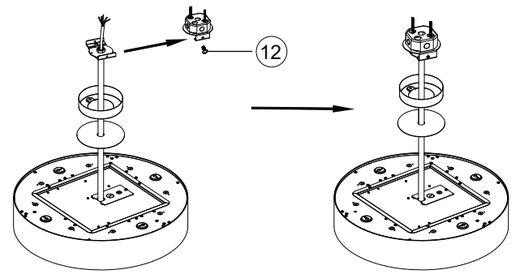

Place the fixed bracket into the mounting bracket and fasten it on the side with screws.

7

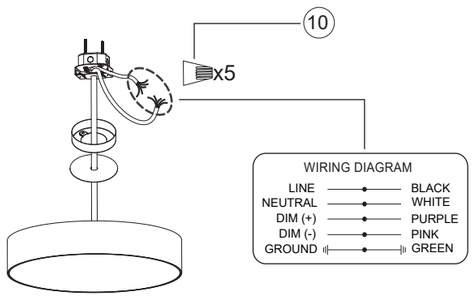

Connect the electric wires with spiral wire nuts.

8

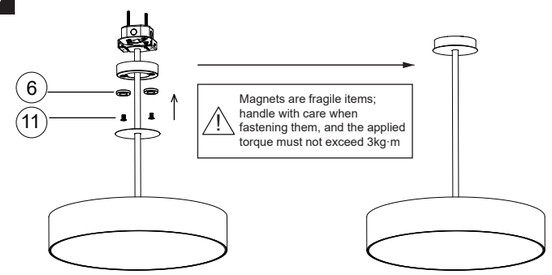

Fasten the ceiling canopy and the magnet to the hoisting bracket with screws, then push the decorative cover up and attach it to the magnet.

*4FT NO Stem Pendant Mount

ARCHITECTURAL ROUND LIGHT

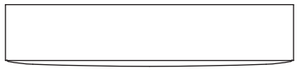

INSTALLATION PROCEDURE

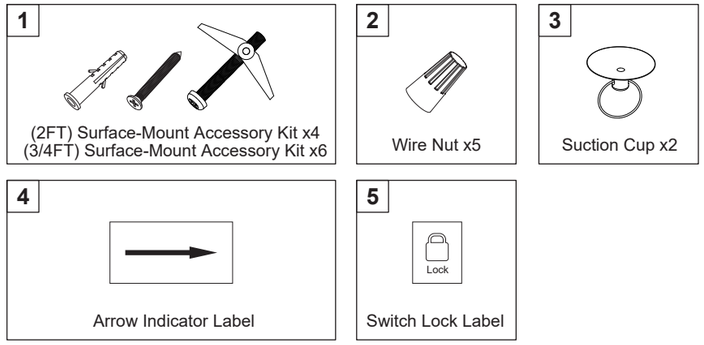

Pre-installation Preparation

Prior to installation, ensure a proper junction box is in place (by others) and install structural supports capable of holding the luminaire weight (see chart).

2FT MOUNTING POSITIONS

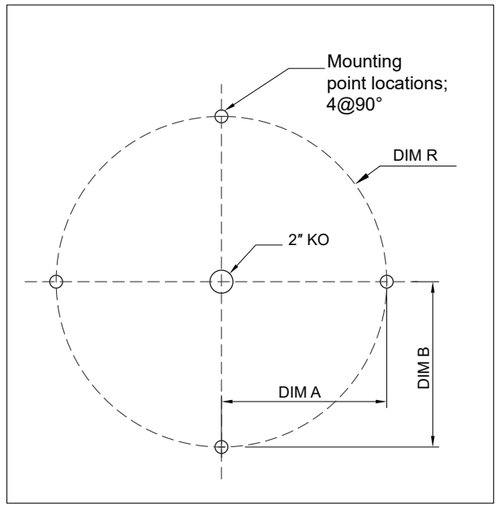

3/4FT MOUNTING POSITIONS

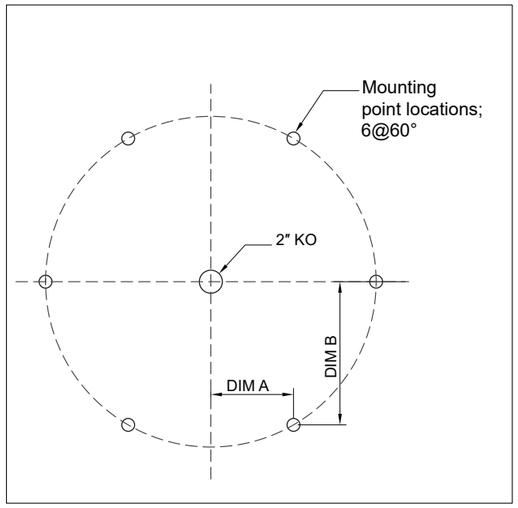

Size	Outer diameter	R	A	B
2FT	22"(561mm)	8-2/3"(220mm)	8-2/3"(220mm)	8-2/3"(220mm)
3FT	34"(866mm)	14-1/2"(368.3mm)	3-3/8"(92.1mm)	6-1/4"(159.5mm)
4FT	46"(1171mm)	20-1/2"(520.7mm)	5-1/8"(130.2mm)	10-1/16"(255.5mm)

1

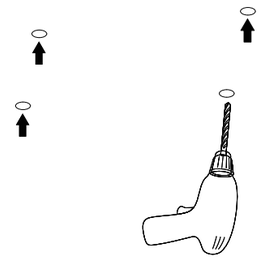

Drill holes for bracers.

2

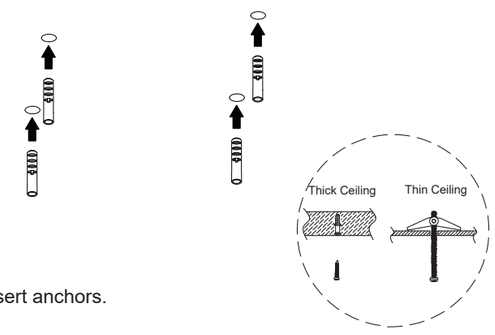

Insert anchors.

DRUM

SURFACE MOUNT INSTALLATION

1

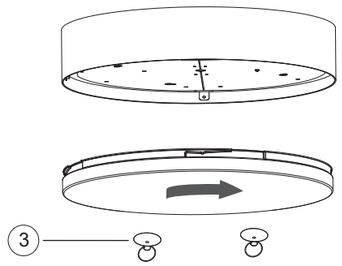

Rotate the diffuser counterclockwise to the end, then remove it with suction cups.

2

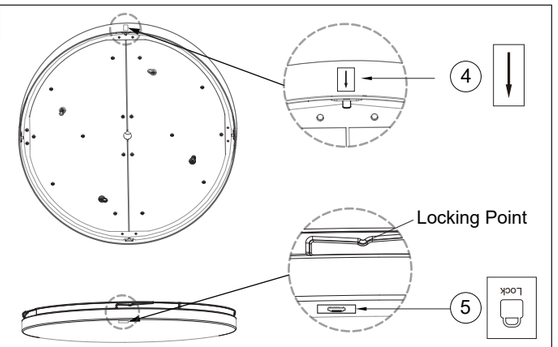

Attach labels to the corresponding locking points on the luminaire body and the diffuser to facilitate positioning when rotating the diffuser.

3

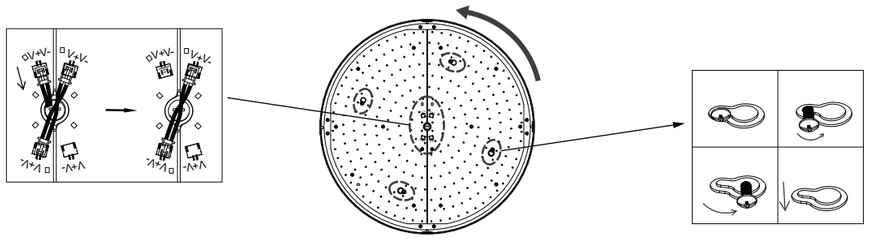

Disengage the LED panel wiring first, then slacken the fastener screws at the gourd-shaped mounting holes (do not fully remove the screws); rotate the LED panel counterclockwise and detach it subsequently.

4

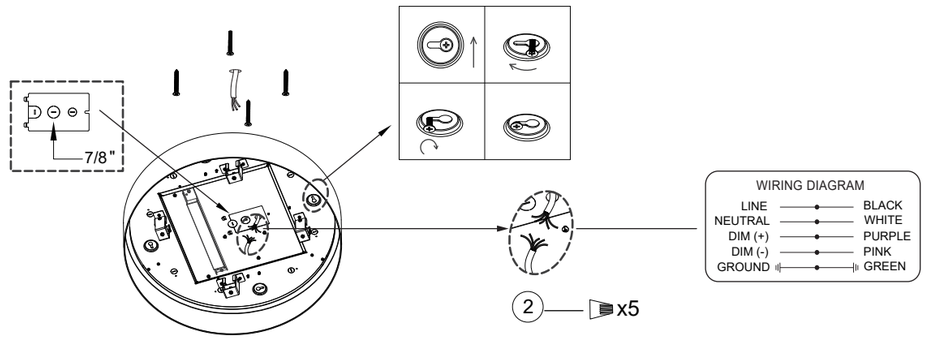

Knock out the knockout hole of the wire cover to let the wires to pass through; align the gourd hole on the luminaire with the screws, rotate the luminaire, tighten the screws, and connect the wires.

5

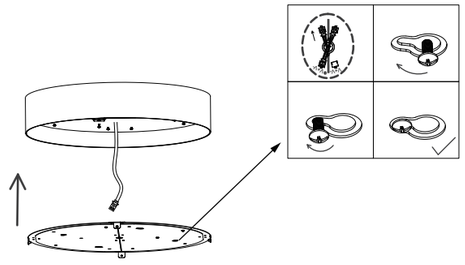

Install the LED panel, plug back the terminal wire, and then tighten the screws.

6

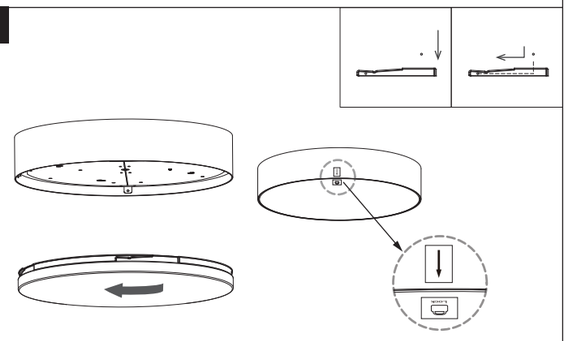

Rotate the diffuser back on until fully tightened, as indicated by the label.